ZEEZ

2020 F7 FLIGHT CONTROLLER V2

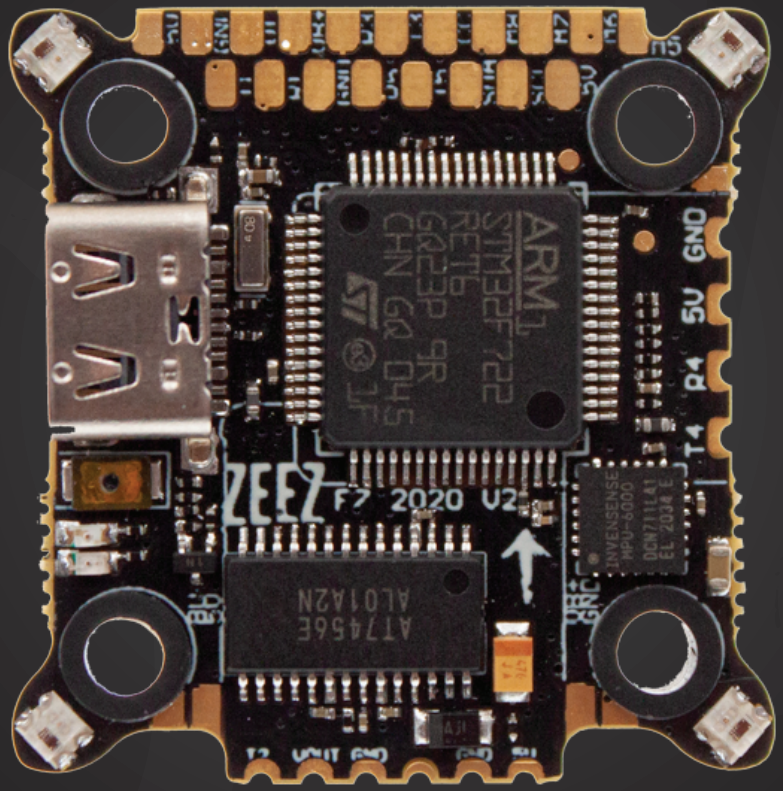

MANUAL

F7 V2

20 x 20

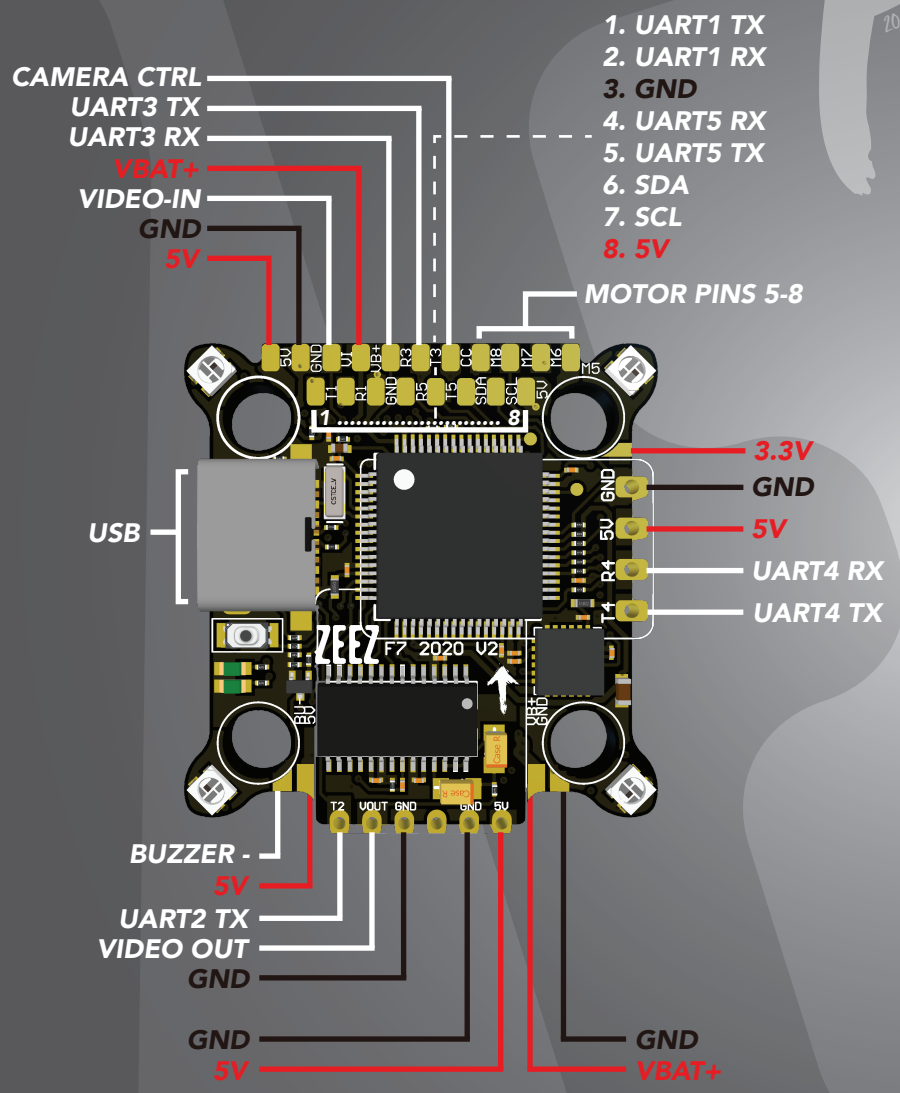

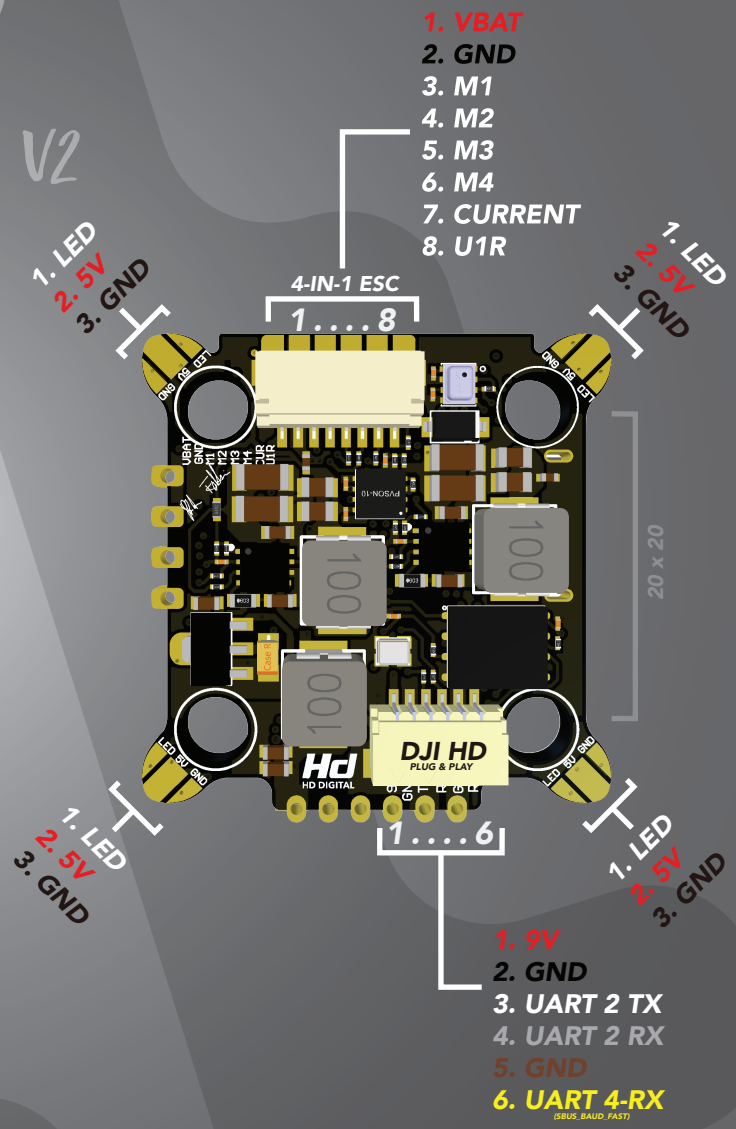

FIRMWARE TARGET: ZEEZF7V2

GUIDO | FOUNDER

ZEEZ

WWW.ZEEZRC.COM

DJI TRANSMITTER

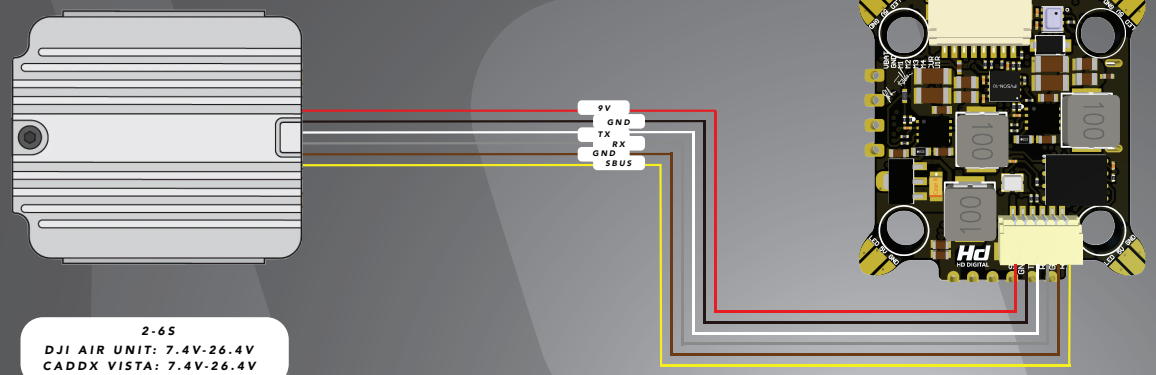

2-6S
DJI AIR UNIT: 7.4V-26.4V
CADDX VISTA: 7.4V-26.4V

IMPORTANT!

TURN ON SBUS FAST IN YOUR GOGGLES
MENU > SETTINGS > DEVICE > PROTOCOL > SBUS FAST

IN BETAFLIGHT, GO TO THE CLI COMMAND
TYPE: SET SBUS_BAUD_FAST = ON > SAVE > ENTER

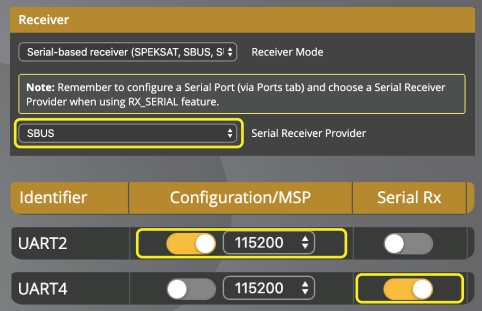

DJI GOGGLES + CRSF

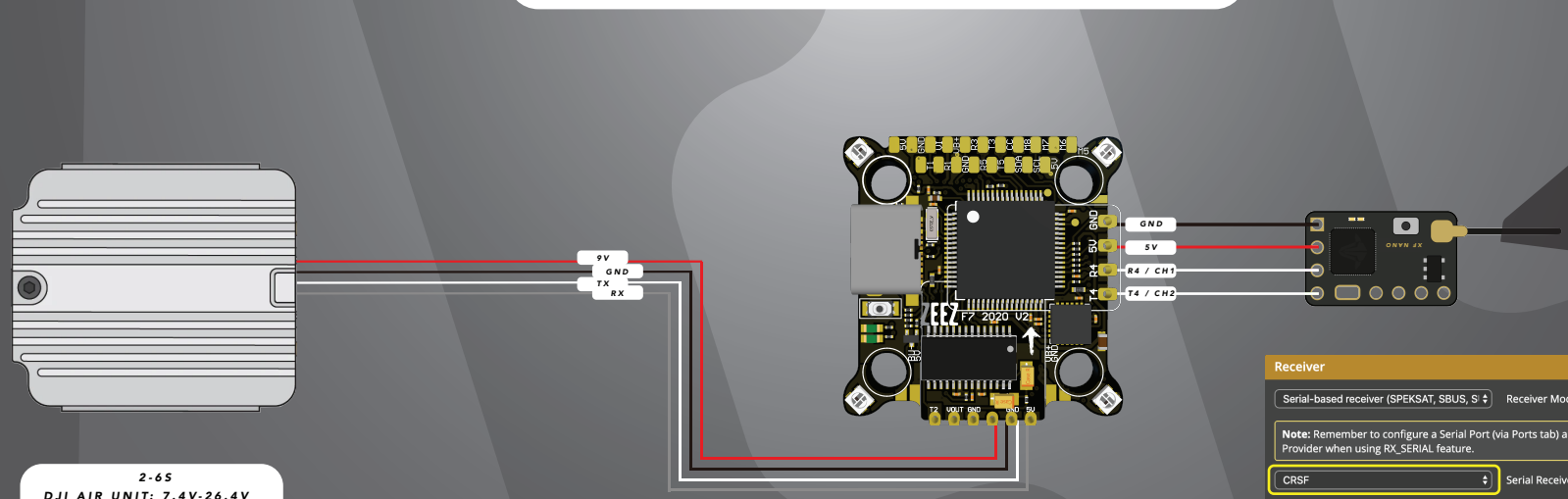

2-6S
DJI AIR UNIT: 7.4V-26.4V
CADDX VISTA: 7.4V-26.4V

IMPORTANT!

DO NOT CONNECT GND & SBUS IF USING
CROSSFIRE WITH DJI PRODUCTS
AIR UNIT OR CADDX VISTA

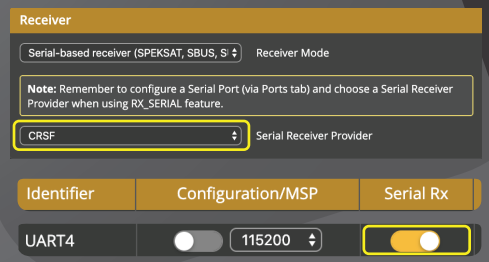

FrSKY F.PORT

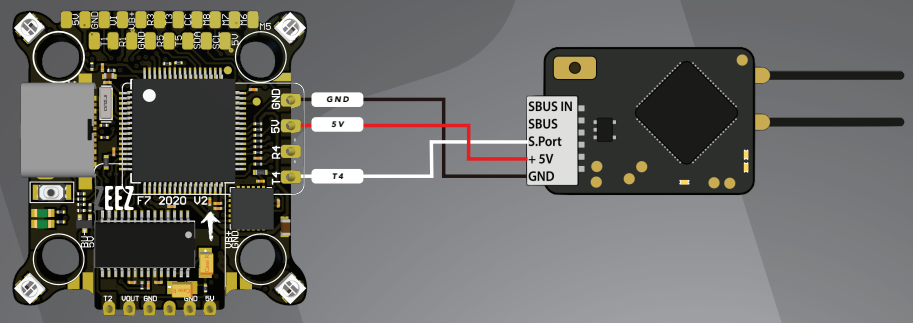

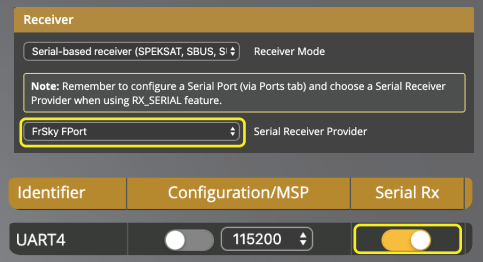

FrSKY SBUS

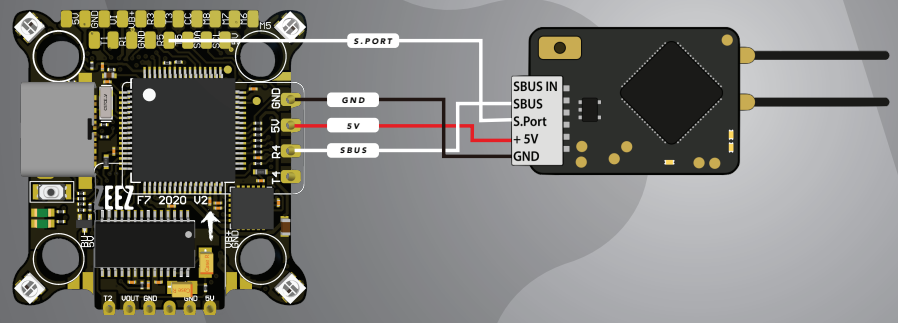

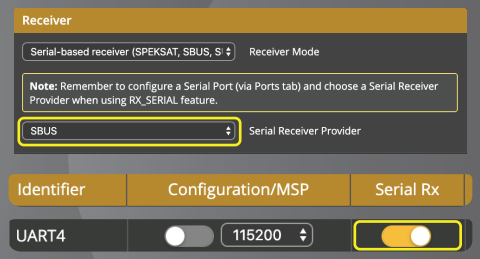

DSMX

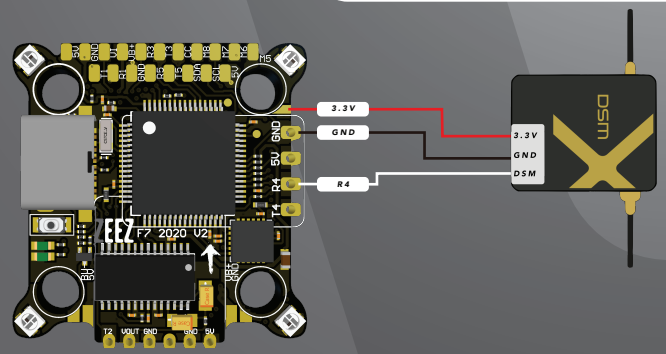

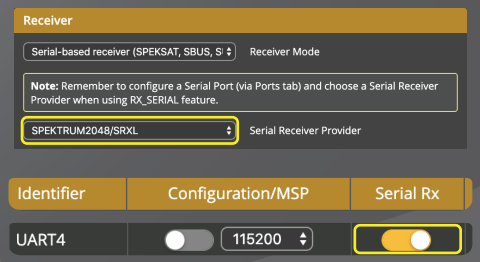

VTX

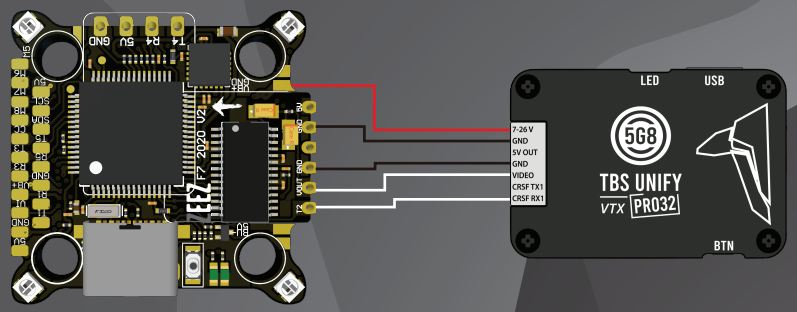

Identifier	Configuration/MSP	Serial Rx	Telemetry Output	Sensor Input	Peripherals
USB VCP	115200		Disabled AUTO	Disabled AUTO	Disabled AUTO
UART1	115200		Disabled AUTO	Disabled AUTO	Disabled AUTO
UART2	115200		Disabled AUTO	Disabled AUTO	VTX (TBS SmartA AUTO
UART3	115200		Disabled AUTO	Disabled AUTO	Disabled AUTO
UART4	115200		Disabled AUTO	Disabled AUTO	Disabled AUTO
UART5	115200		Disabled AUTO	Disabled AUTO	Disabled AUTO

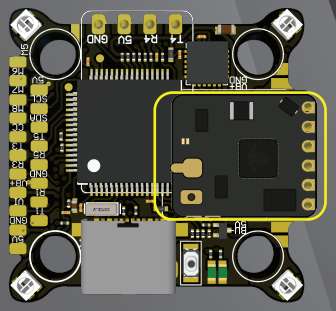

Identifier	Configuration/MSP	Serial Rx	Telemetry Output	Sensor Input	Peripherals
USB VCP	115200		Disabled AUTO	Disabled AUTO	Disabled AUTO
UART1	115200		Disabled AUTO	Disabled AUTO	Disabled AUTO
UART2	115200		Disabled AUTO	Disabled AUTO	VTX (TBS SmartA AUTO
UART3	115200		Disabled AUTO	Disabled AUTO	Disabled AUTO
UART4	115200		Disabled AUTO	Disabled AUTO	Disabled AUTO
UART5	115200		Disabled AUTO	Disabled AUTO	Disabled AUTO

CAM

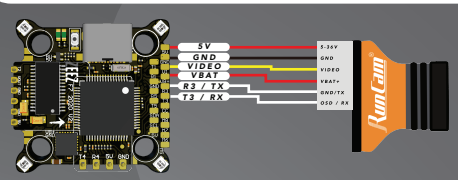

UART CONTROL

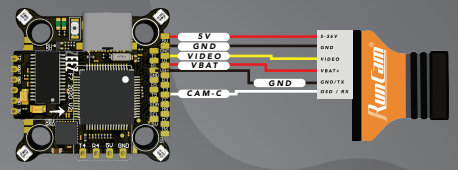

JOYSTICK EMULATION

GPS

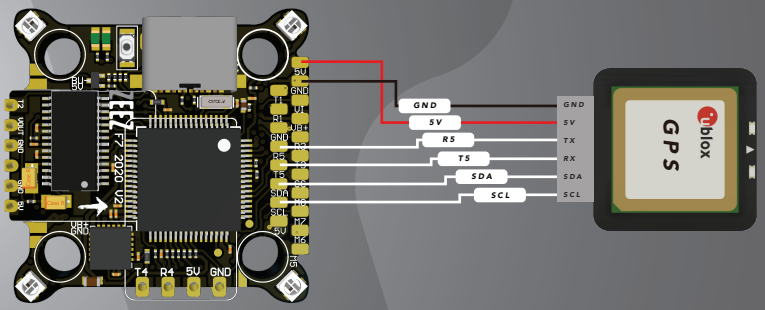

LED

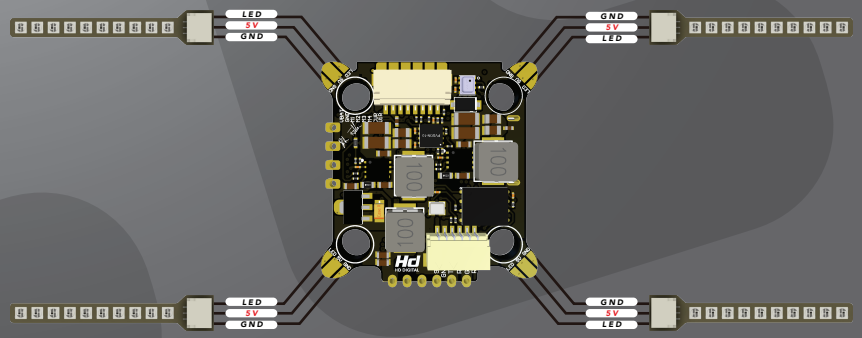

ZEEZ

SUPPORT@ZEEZRC.COM